Ionic Structures & Design LLC

STRUCTURAL ISSUES IN RESIDENTIAL CONSTRUCTION

Presented by:
Susan L. Lasecki P.E., S.E.

Presentation Outline

- Gravity Design
  - Load Paths from Roof to Foundation
  - Roof Framing
  - Floor Framing
  - Wall Framing
- Lateral Loads
  - Basement walls

Gravity Design

- Complete load paths include the transfer of vertical loads (both downward and uplift) from the roof to the foundations
- Load Sources
  - Dead load – self weight
  - Snow load
  - Live load

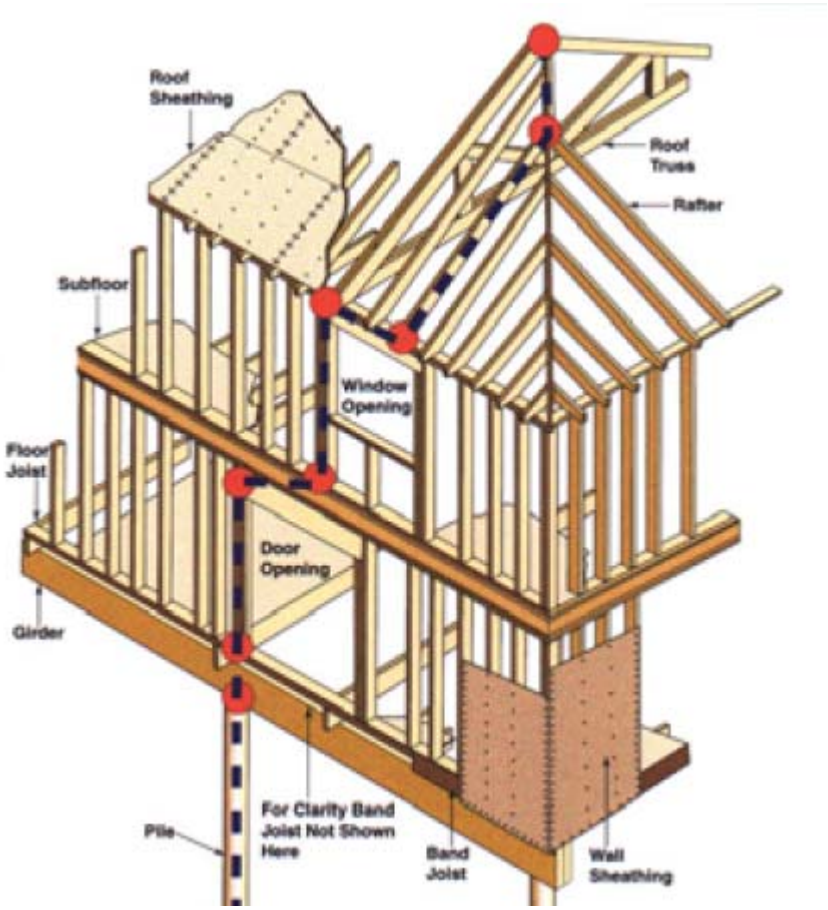

Gravity Design - Roof

- Roof Framing
  - Manufactured wood trusses
  - Conventional Framing
    - Joist and rafter tables in Appendix based on span and species and allowable deflection
- Loads
  - Snow
  - Wind
    - Downward – does not govern
    - Uplift = 20 psf

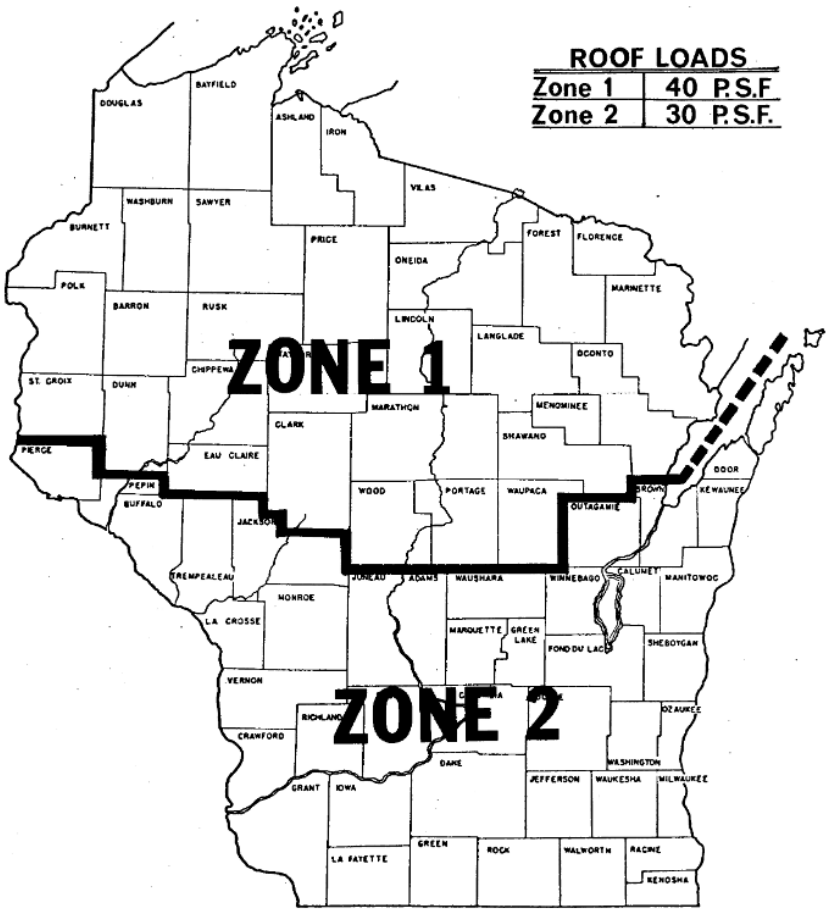

Conventional Roof Framing

- Conventional roof framing consists of 2x members installed as roof rafters and ceiling joists. Code section SPS321.27
  - Typical spacing = 16” o.c.
  - Roof framing members required to be anchored using engineered clips, straps or hangers.
  - Collar ties every 48” o.c.
  - Ceiling joists are required for providing lateral restraint. If ceiling joists are not provided an engineered system needs to be in place such as a ridge beam, wall ties, etc.

Roof Trusses

- Pre-manufactured roof framing system typically installed at @ 24" o.c.
- Issues:
  - Connections
  - Gable end framing
  - Temporary bracing

Roof Truss - Connections

- Connections must resist loads from wind shear, wind uplift and top of wall wind reaction.

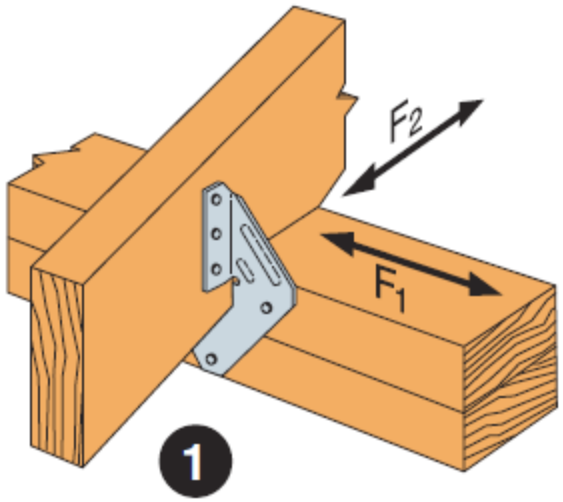

H1 Installation

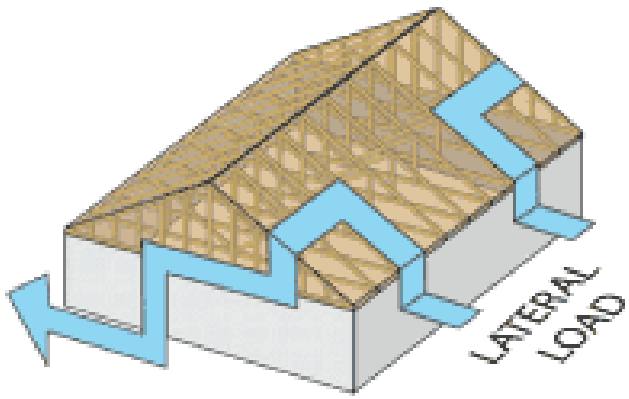

Lateral loads acting on the side wall

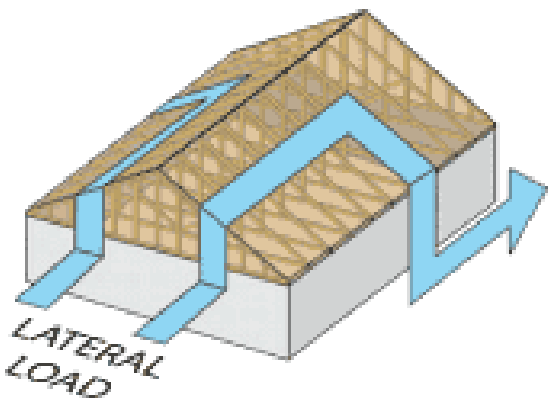

Lateral loads acting on the gable end wall

Roof Truss – Gable End Framing

Gable End Framing

- Top of wall bracing typically accomplished by attachment of drywall sheathing to truss bottom chord which is then transferred into the perpendicular walls

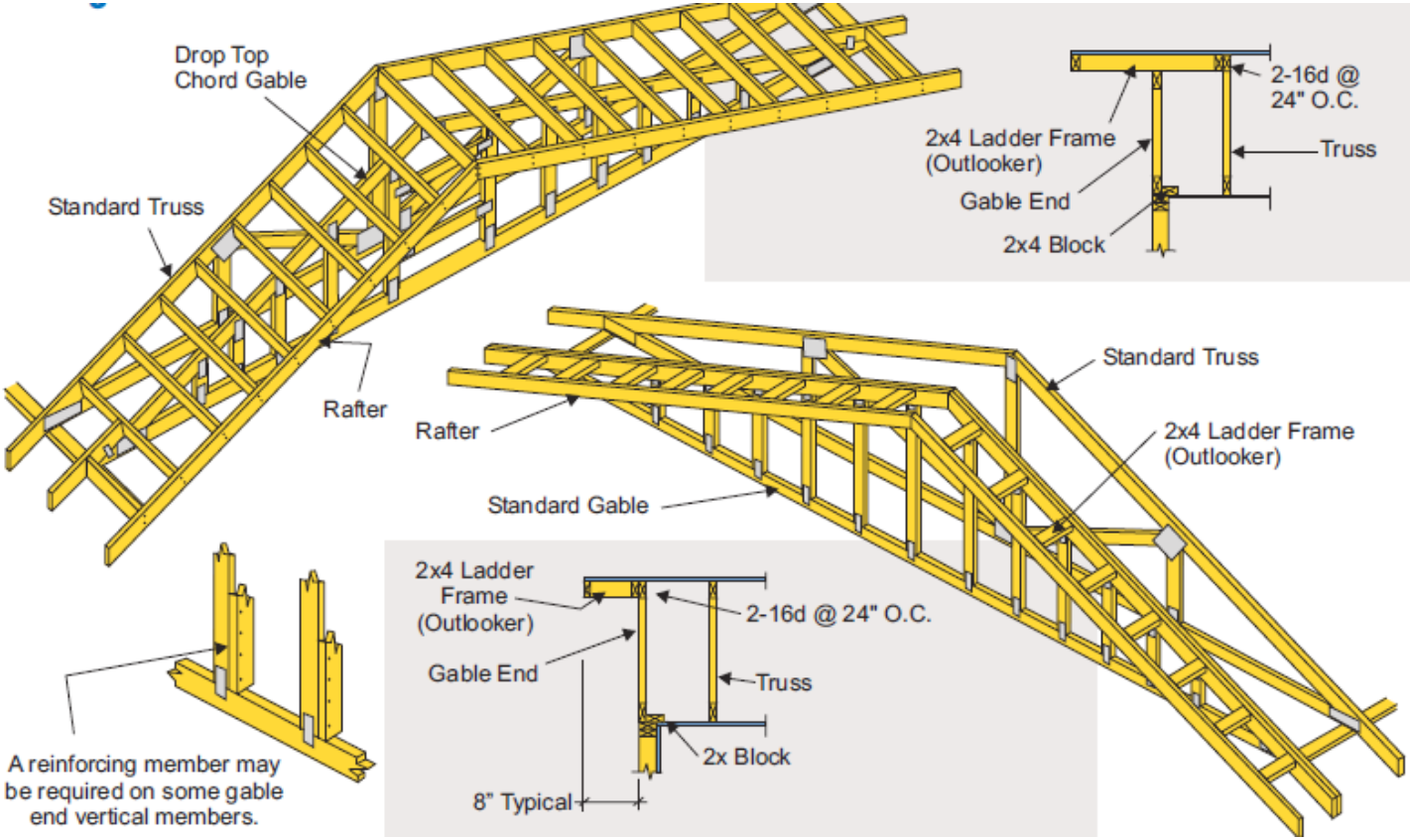

Illustration from the Alpine Encyclopedia of Trusses

Roof Truss – Gable End Framing

Gable End Framing

- When the loads at the gable end are very high, another method may be needed to transfer the wind loads into the perpendicular walls.
- A horizontal truss is used in this application

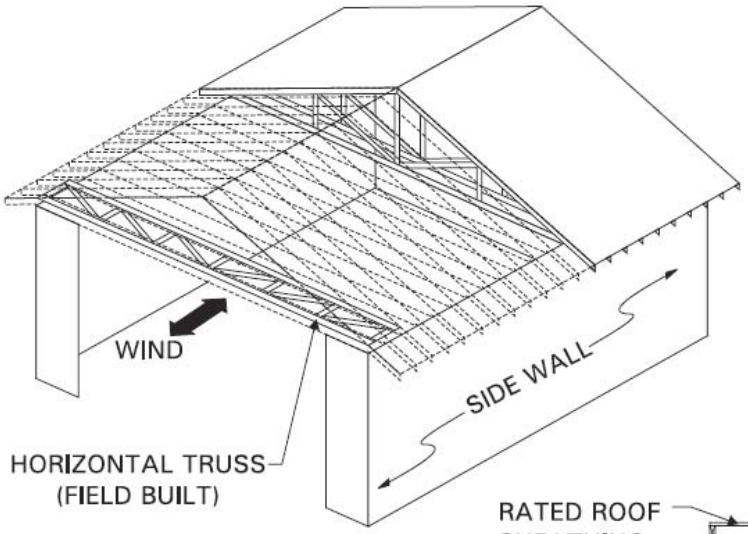

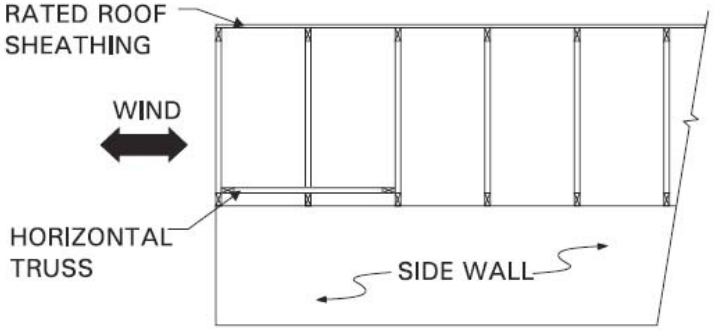

Illustration from the Commentary for Permanent Bracing of Metal Plate Connected Wood Trusses, John E. Meeks

Roof Truss – Gable End Framing

Gable End Framing

- Diagonal bracing used to transfer the wind reaction to the wood roof diaphragm

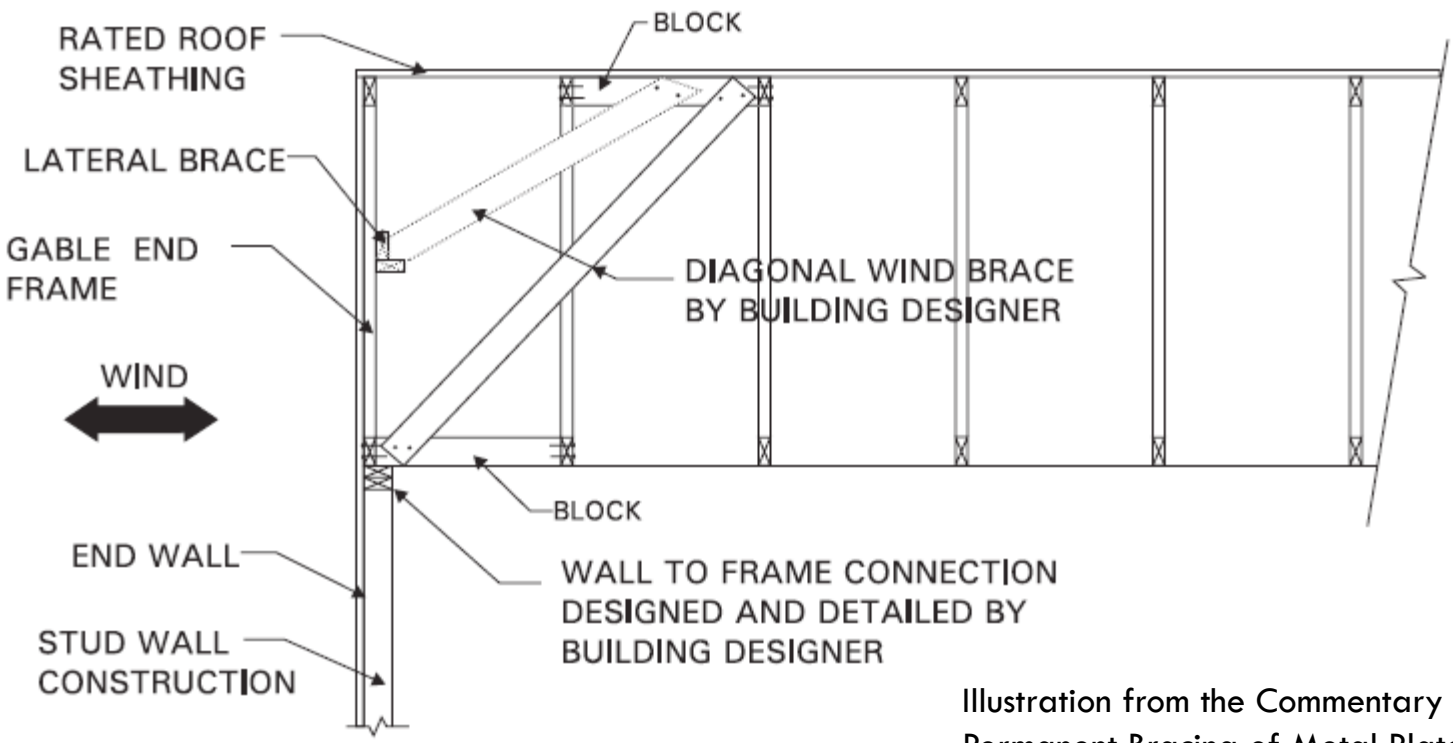

Illustration from the Commentary for Permanent Bracing of Metal Plate Connected Wood Trusses, John E. Meeks

Roof Truss - Bracing

- Permanent bracing is designed by the truss supplier and illustrated on the truss shop drawings.
- Temporary bracing is the responsibility of the general contractor in accordance with the installation instructions provided by the truss supplier.
  (see next slide)

Guidelines For Installation Of Bracing From HIB-91

All trusses must be securely braced, both during erection and after permanent installation. Individual wood trusses are designed only as structural components. Responsibility for proper bracing always lies with the building designer and contractor for they are familiar with local and job-site conditions and overall building design.

All trusses should be installed straight, plumb and aligned at the specified spacing. Trusses should also be inspected for structural damage.

There are two types of bracing. Temporary bracing is used during erection to hold the trusses until permanent bracing, sheathing and ceilings are in place. Permanent bracing makes the truss component an integral part of the roof and building structure. Temporary and permanent bracing includes diagonal bracing, cross bracing and lateral bracing.

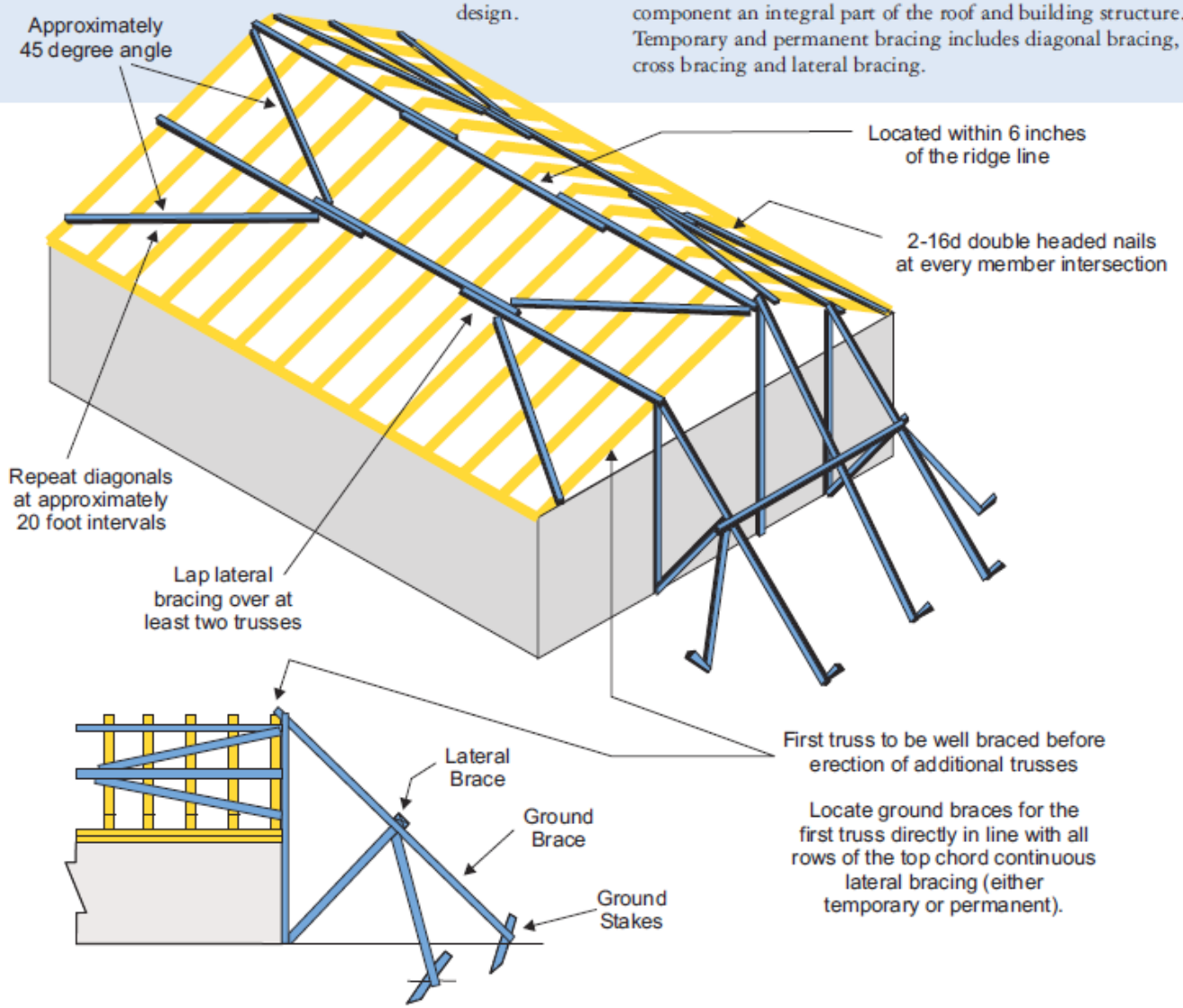

Illustration from the Alpine Encyclopedia of Trusses

Gravity Design – Floor Joists

- Floor Framing
  - Manufactured wood trusses
  - TJI
  - Conventional Framing
    - Joist tables in Appendix based on span, species and allowable deflection
- Loads
  - Dead load
  - Live load

Table 321.02

Component	Live Load (pounds per sq. ft.)
Floors	40
Garage floors	50
Exterior balconies, decks, porches	40
Ceilings (with storage)	20
Ceilings (without storage)	5

Joist Cantilevers

WI - UDC

(6) OVERHANG OF FLOORS. (a) *General*. Except as provided in pars. (b) and (c), a floor joist overhang shall be cantilevered beyond the outer edge of the supporting wall below it by no more than the actual depth of the joist or shall be designed through structural analysis in accordance with s. SPS 321.02 (3).
(b) *Joist overhangs parallel to the main floor framing system*. Joist overhangs that are extensions of, and parallel to, the main floor framing system may extend beyond the depth of the joist without structural analysis provided they meet all of the following conditions:
1. The overhang is cantilevered no more than 2 feet beyond the outer edge of the supporting wall below it.
2. a. The overhang supports a uniform load limited to the weight of the bearing wall and the tributary roof area above it.
b. The tributary length of the roof area, excluding the eave overhang, is no more than 2 feet greater than the actual length of the joist directly below.

This section continues…

IRC

- **R502.3.3 Floor cantilevers.** Floor cantilever spans shall not exceed the nominal depth of the wood floor joist. Floor cantilevers constructed in accordance with Table R502.3.3(1) shall be permitted when supporting a light-frame bearing wall and roof only. Floor cantilevers supporting an exterior balcony are permitted to be constructed in accordance with Table R502.3.3(2).

Joist Cantilevers

In General

- Cantilevers must have a backspan to cantilever ratio of 2:1 minimum.
- If the cantilever end is loaded with a wall, the ratio needs to be increased.
- If a cantilever does not fit within the "prescriptive" text of the code, it should be reviewed by an engineer.
- Solid blocking should be installed between all cantilevered joists at the bearing location.

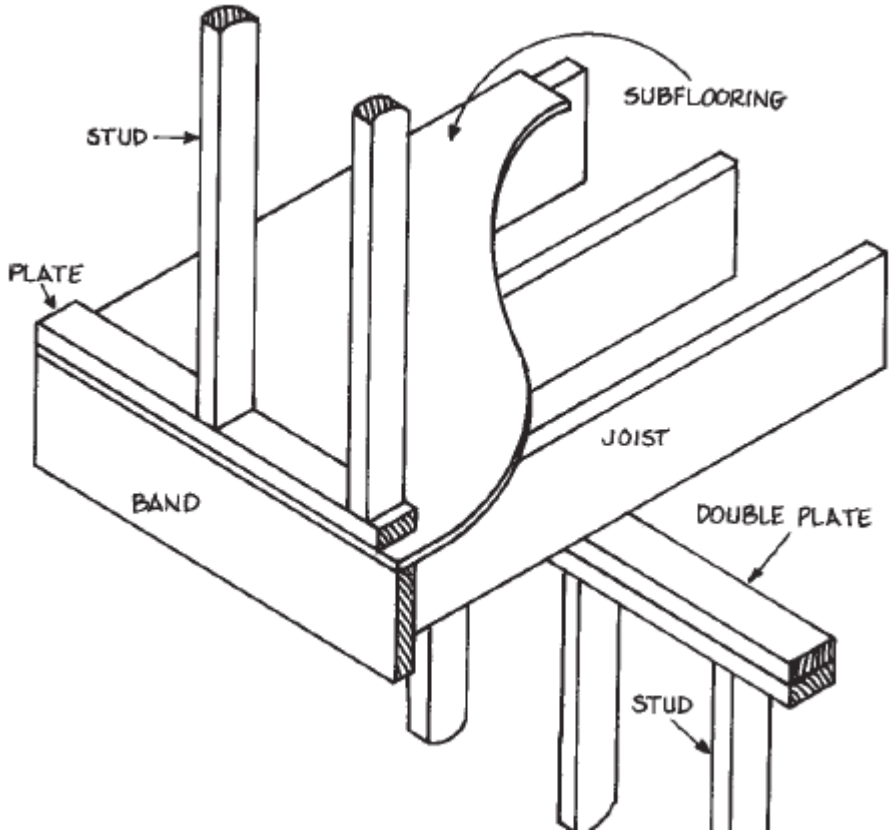

Floor Framing

Bridging/Blocking –
Conventional wood framing

- Diagonal
- Solid

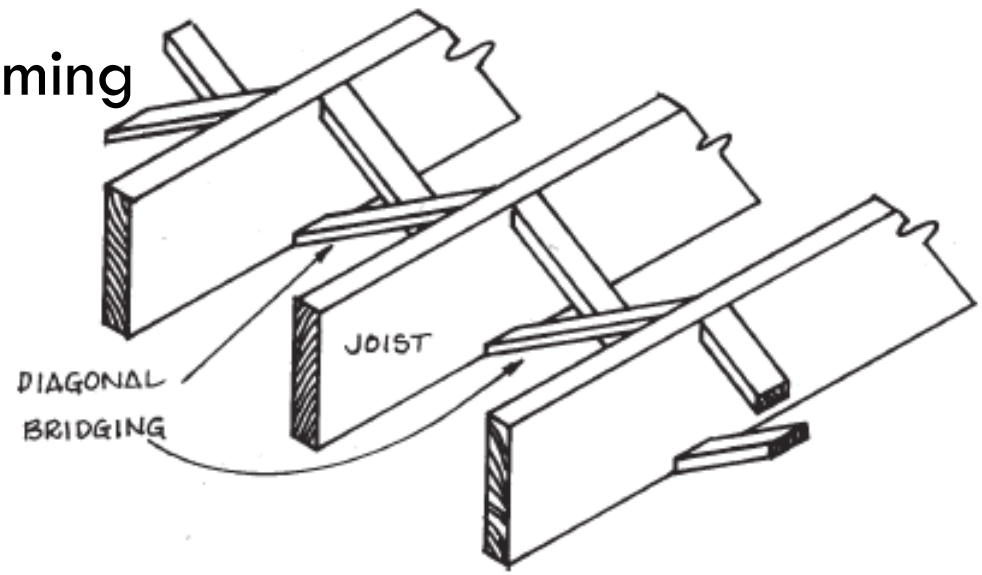

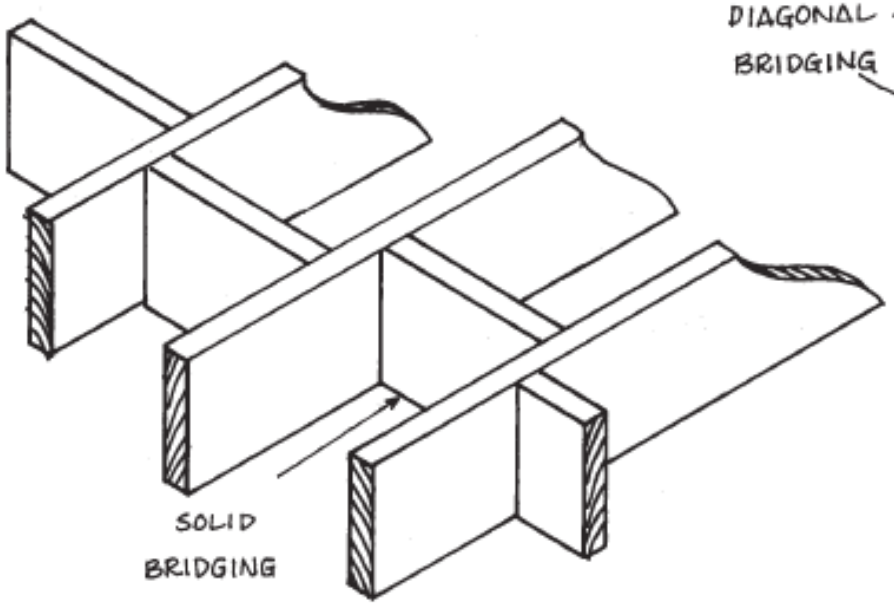

Floor Joists – Parallel to Basement Wall

- Wisconsin UDC

2. a. Where the floor framing is parallel to the foundation wall, solid blocking or bridging shall be installed in at least the first adjacent joist space at a spacing of no more than 32 inches on center.

b. Blocking and bridging shall be the same depth as the joist.

c. Fastening of the blocking or bridging shall be in accordance with structural analysis or the fastener table printed in the appendix to this code.

Load Bearing Wood Studs

- Capacity of studs is based on:
  - Max spacing.
  - Assumed loads.
  - Stud grade species
  - Fully braced studs in weak direction.
    - Application of sheathing or drywall on one side or
    - Blocking at 4’-0” o.c. (minimum)

Gravity Design – Wood walls

Wisconsin Residential Code

- Maximum allowable unbraced height for a load bearing wall is 10'-0" without additional engineering

Table 321.25–A

SIZE, HEIGHT AND SPACING OF WOOD STUDS[a]

Stud Size (inches)	Bearing Walls					Nonbearing Walls	
	Laterally unsupported stud height[a] (feet)	Maximum spacing when supporting roof and ceiling only (inches)	Maximum spacing when supporting one floor, roof and ceiling (inches)	Maximum spacing when supporting two floors, roof and ceiling (inches)	Maximum spacing when supporting one floor only (inches)	Laterally unsupported stud height[a] (feet)	Maximum spacing (inches)
2 x 3[b]	–	–	–	–	–	10	16
2 x 4	10	24	16	–	24	14	24
3 x 4	10	24	24	16	24	14	24
2 x 5	10	24	24	–	24	16	24
2 x 6	10	24	24	16	24	20	24

[a] Listed heights are distances between points of lateral support placed perpendicular to the plane of the wall. Increases in unsupported height are permitted where justified by analysis. Studs shall be stud grade or better, except that utility grade may be used when spaced not more than 16 inches on center, supports no more than a roof and ceiling and does not exceed 8 feet in height for exterior walls or 10 feet in height for interior nonload–bearing walls.

[b] May not be used in exterior walls.

Note: A 3–story frame house with walls constructed of 2 x 4 standard grade studs would require a 12–inch stud spacing on the lowest level, a 24–inch stud spacing on the intermediate level, and a 24–inch stud spacing on the upper level.

Gravity Design – Wood walls

IRC

- Maximum allowable unbraced height for a load bearing wall is 10'-0" without additional engineering

TABLE R602.3(5) SIZE, HEIGHT AND SPACING OF WOOD STUDS[a]

STUD SIZE(inches)	BEARING WALLS					NONBEARING WALLS	
	Laterally unsupported stud height[a](feet)	Maximum spacing when supporting a roof-ceiling assembly or a habitable attic assembly, only (inches)	Maximum spacing when supporting one floor, plus a roof-ceiling assembly or a habitable attic assembly(inches)	Maximum spacing when supporting two floors, plus a roof-ceiling assembly or a habitable attic assembly(inches)	Maximum spacing when supporting one floor height[a] (feet)	Laterally unsupported stud height[a](feet)	Maximum spacing(inches)
				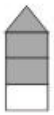	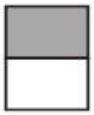		
2 × 3[b]	-	-	-	-	-	10	16
2 × 4	10	24[c]	16[c]	-	24	14	24
3 × 4	10	24	24	16	24	14	24
2 × 5	10	24	24	-	24	16	24
2 × 6	10	24	24	16	24	20	24

a. Listed heights are distances between points of lateral support placed perpendicular to the plane of the wall. Increases in unsupported height are permitted where justified by analysis.

b. Shall not be used in exterior walls.

c. A habitable attic assembly supported by 2 × 4 studs is limited to a roof span of 32 feet. Where the roof span exceeds 32 feet, the wall studs shall be increased to 2 × 6 or the studs shall be designed in accordance with accepted engineering practice.

Tall Walls

Full Height Basement Wall Loads

Loads

- Total horizontal load W=q*h^2/2
- q can vary from 40 to 65 lbs/ft depending on the soil conditions (lower for sand and higher for clay)
- Top reaction = W/3
- Bottom reaction = 2/3W

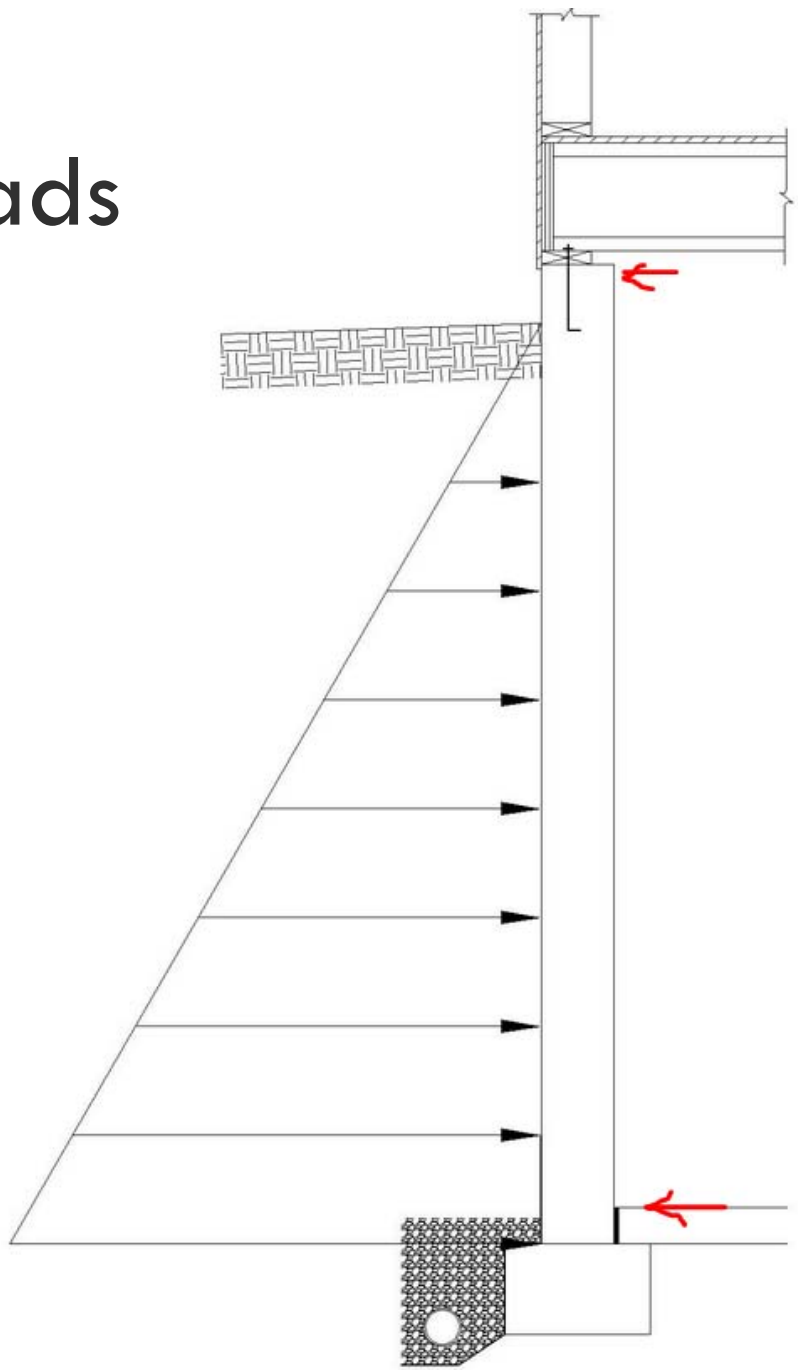

Partial Height Foundation Walls

Observed Condition

Potential failure:

- Rotation of the frost wall inward
- Excessive rotation could cause a first floor framing collapse

Repair Methods – for existing conditions

- Install wood or metal studs full height inside the wall capable of supporting full lateral load. Anchor studs to slab on grade and wood floor framing above.

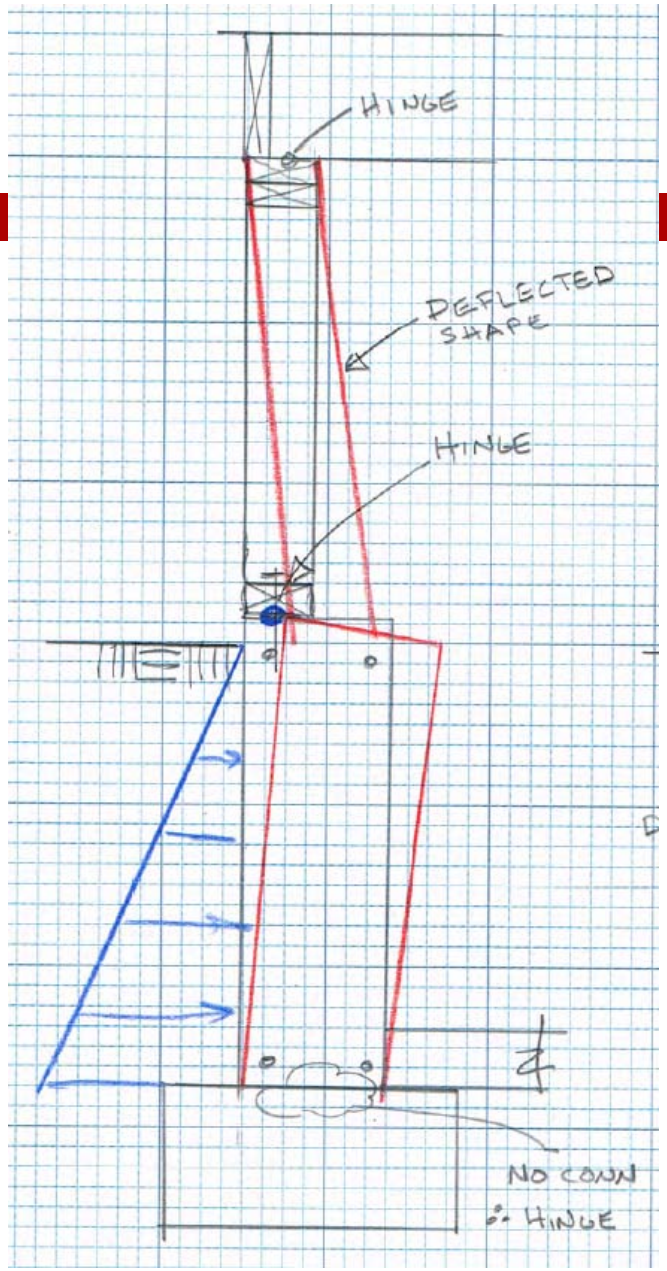

Partial Height Foundation Walls Code Requirements

WI-UDC

- **SPS 321.18 Foundations. (1)** GENERAL. (a) *Design*. Foundation walls shall be designed and constructed to support the vertical loads of the dwelling, lateral soil pressure, and other loads without exceeding the allowable stresses of the materials of which the foundations are constructed.
- (b) *Lateral support at base*. Lateral support such as floor slab or framing shall be provided at the base of foundation walls.
- (c) *Lateral support at top*. Lateral support shall be provided at the top of the foundation walls by one of the following:
  - 2. Structural analysis. A system designed through structural analysis
  - 3. Anchor bolts. a. Structural steel anchor bolts, at least ½inch in diameter, embedded at least 7 inches into the [concrete or] grouted masonry with a maximum spacing of 72 inches and located within 18 inches of wall corners.

Partial Height Foundation Walls Code Requirements

IRC

R404.1.2.2.2 Concrete foundation stem walls supporting light-frame above-grade walls. Concrete foundation stem walls that support light-frame above-grade walls shall be designed and constructed in accordance with this section. 1. Stem walls not laterally supported at top. Concrete stem walls that are not monolithic with slabs-on-ground or are not otherwise laterally supported by slabs-on-ground and retain 48 inches (1219 mm) or less of unbalanced fill, measured from the top of the wall, shall be constructed in accordance with Section R404.1.2. Foundation stem walls that retain more than 48 inches (1219 mm) of unbalanced fill, measured from the top of the wall, shall be designed in accordance with Sections R404.1.3 and R404.4.

R404.1.3 Design required. Concrete or masonry foundation walls shall be designed in accordance with accepted engineering practice when either of the following conditions exists: 1. Walls are subject to hydrostatic pressure from groundwater. 2. Walls supporting more than 48 inches (1219 mm) of unbalanced backfill that do not have permanent lateral support at the top or bottom.

R404.4 Retaining walls. Retaining walls that are not laterally supported at the top and that retain in excess of 24 inches (610 mm) of unbalanced fill shall be designed to ensure stability against overturning, sliding, excessive foundation pressure and water uplift. Retaining walls shall be designed for a safety factor of 1.5 against lateral sliding and overturning.

Partial Height Foundation Walls

Correct Design Condition

- Design lower portion of wall as a retaining wall.
- Wall needs to be connected to footing with dowels at uniform spacing.
- Connection between wall and footing is considered "fixed" rather than hinged.

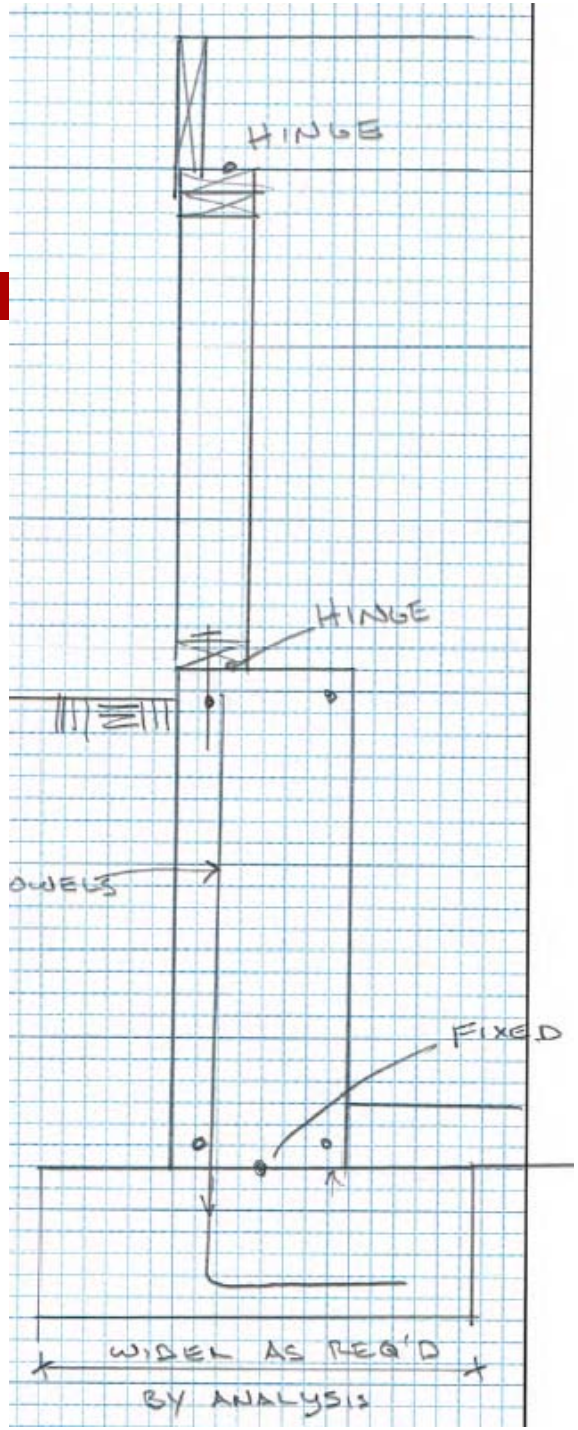

Foundation Construction: Multiple Top Plate

Recently observed condition in a home where the G.C. wanted to increase clear height in basement without using taller concrete forms.
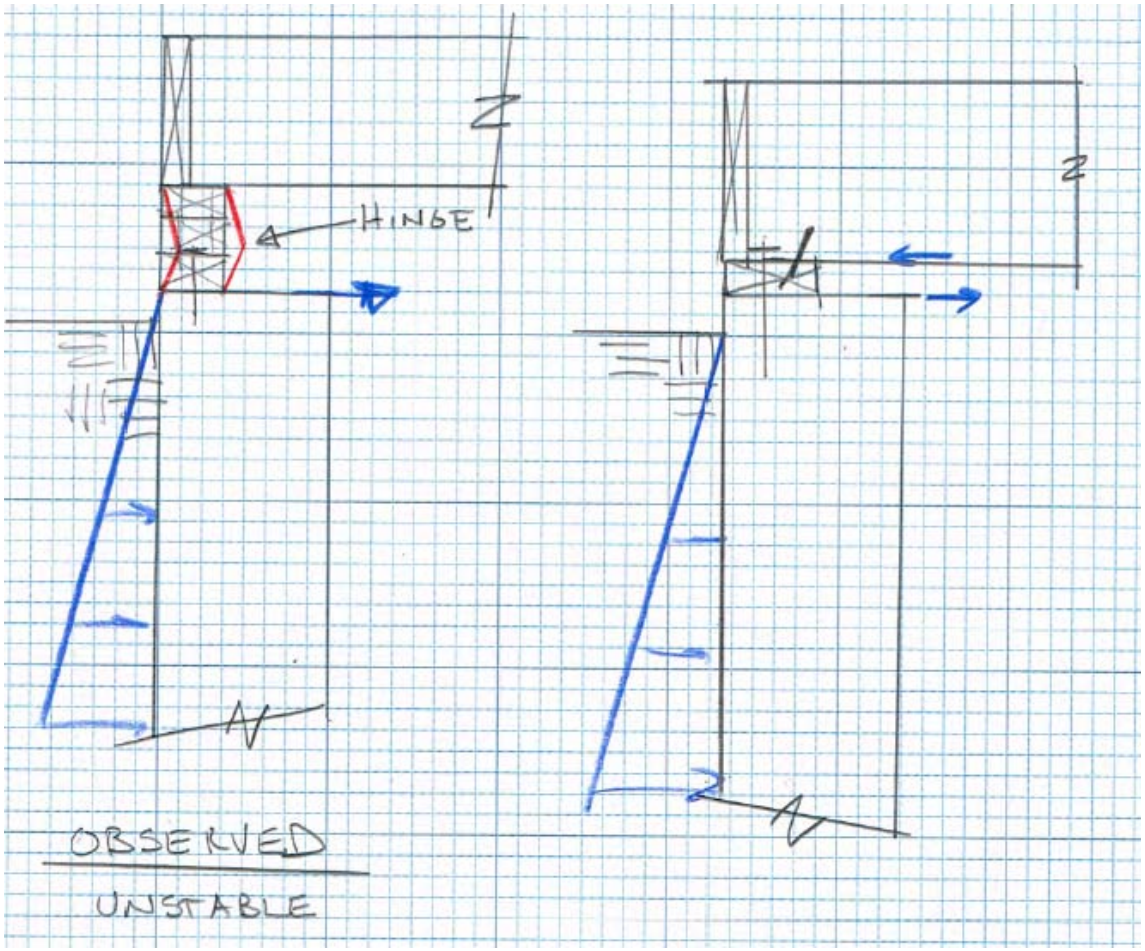
- The triple top plate leads to an indirect load transfer and the potential for the top of the wall to rotate inward. The plate to plate connection is not a fixed connection and the plates can separate. Not sure how the anchor bolts were installed.